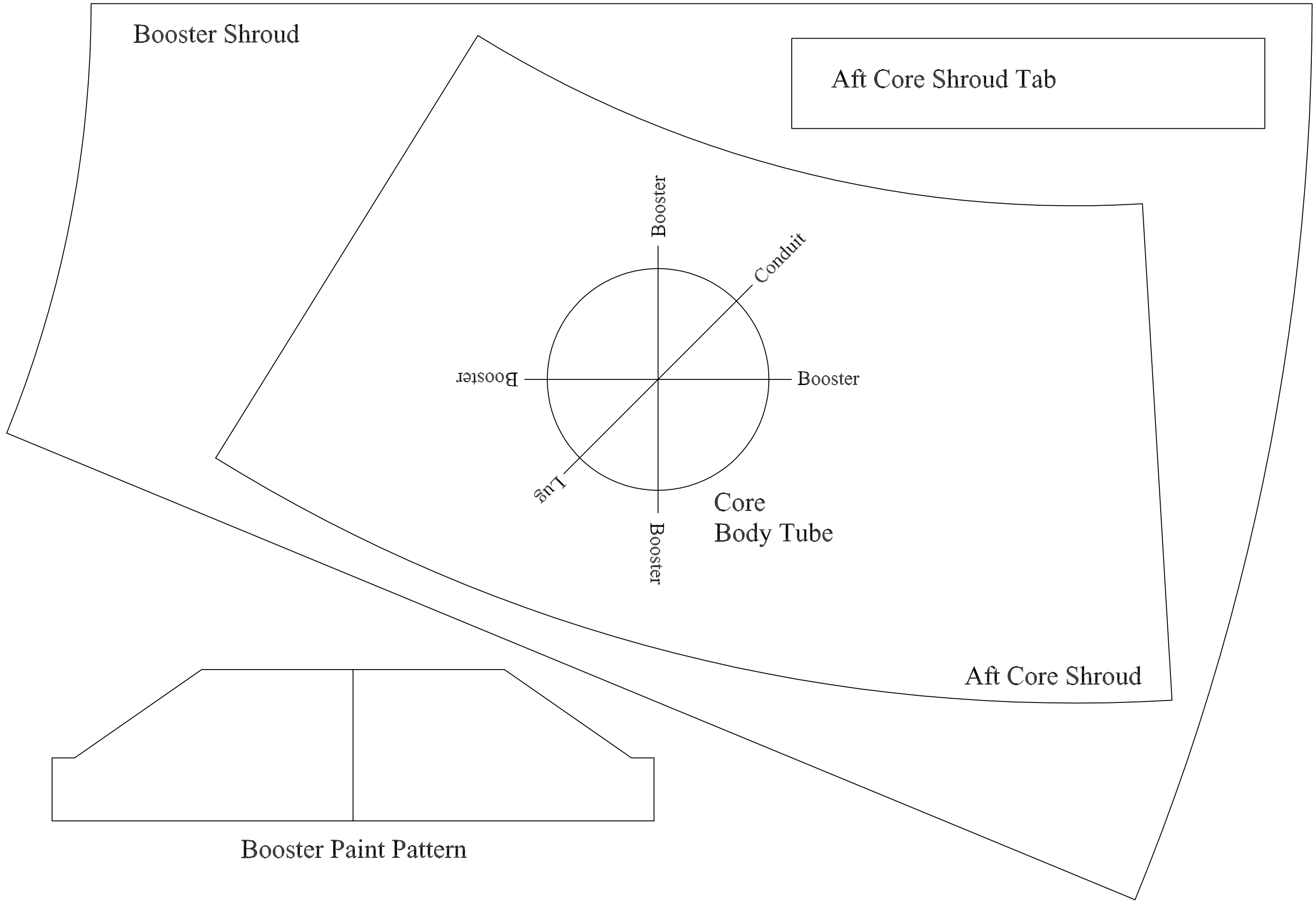
Booster Shroud
Aft Core Shroud Tab
Booster
Conduit
Booster
Booster
Lug
Booster
Core
Body Tube
Aft Core Shroud
Booster Paint Pattern

Vostok Housing

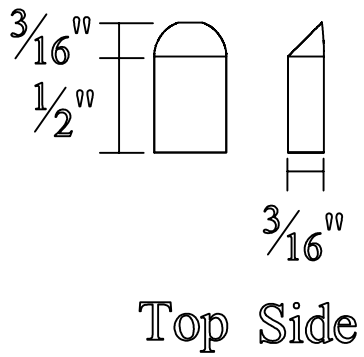

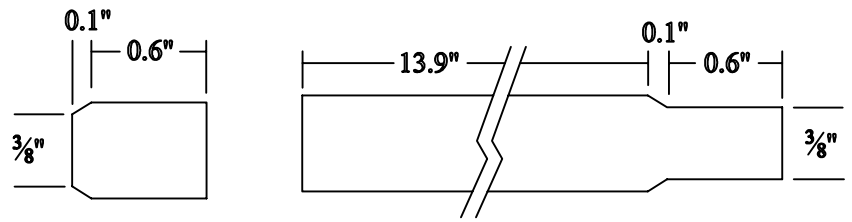

Aft Core Conduit

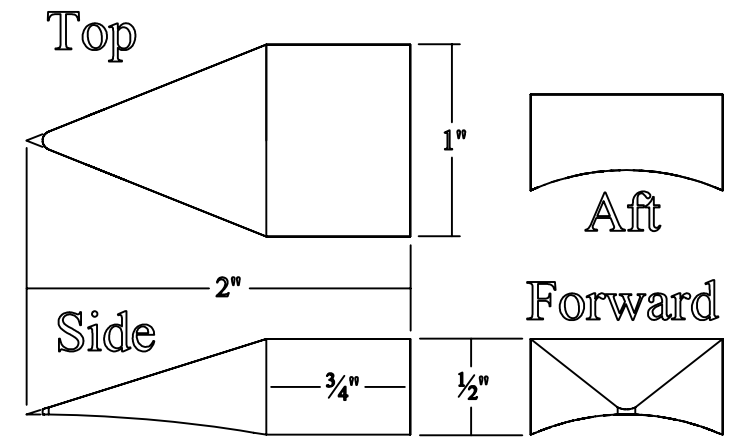

Core Housing

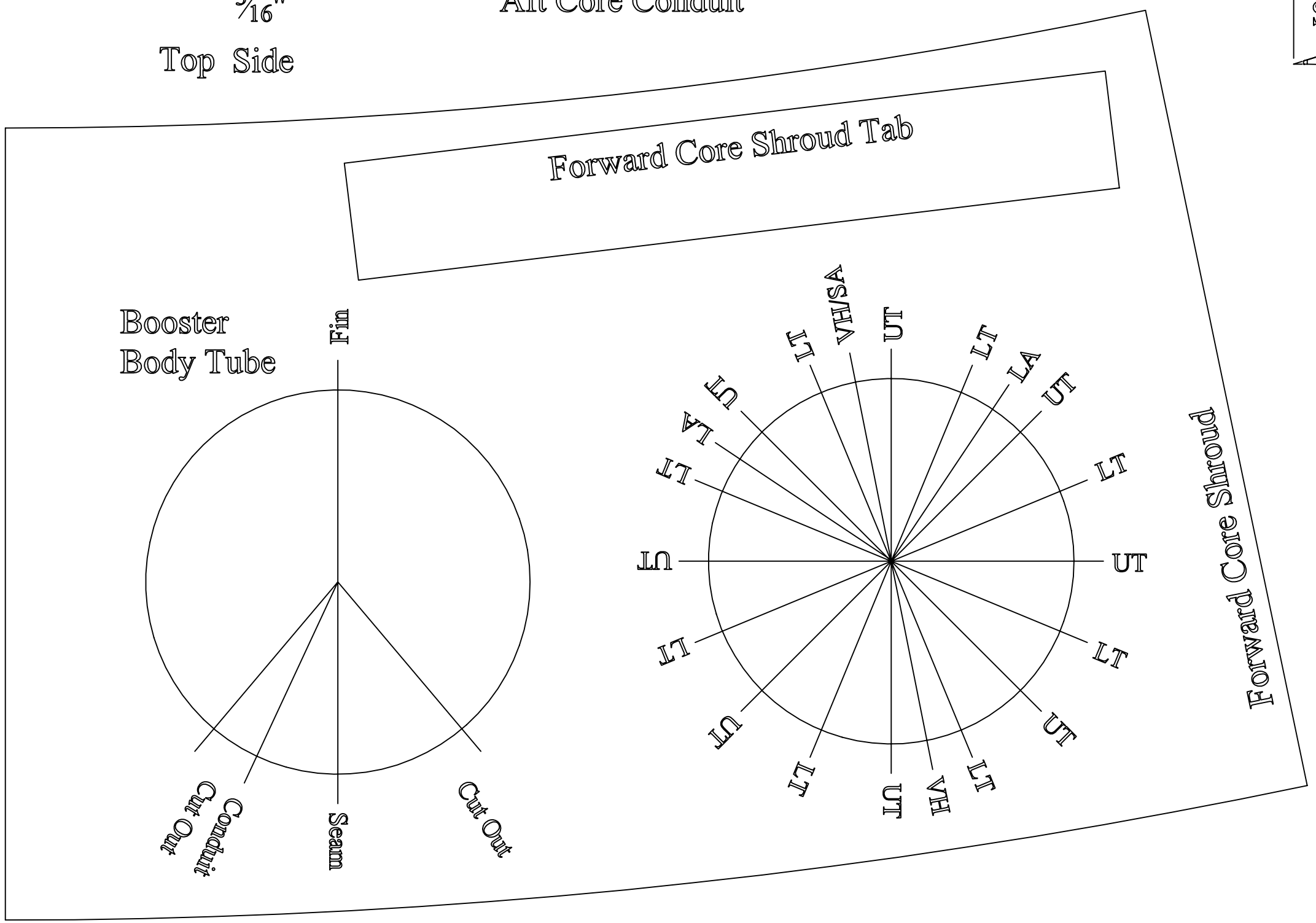

Large Antenna

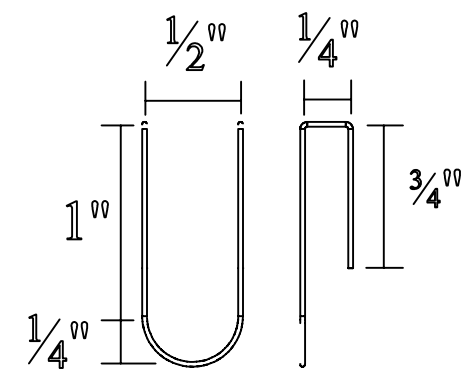

Small Antenna

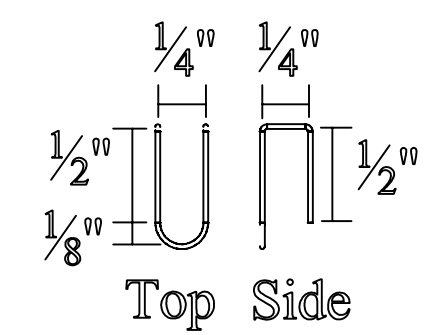

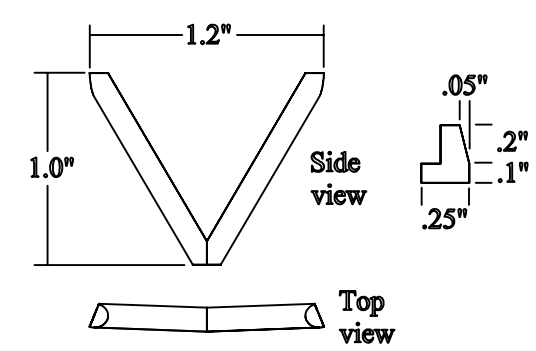

Truss